Schematic diagram

Saturday, April 4, 2020 11:45 AM

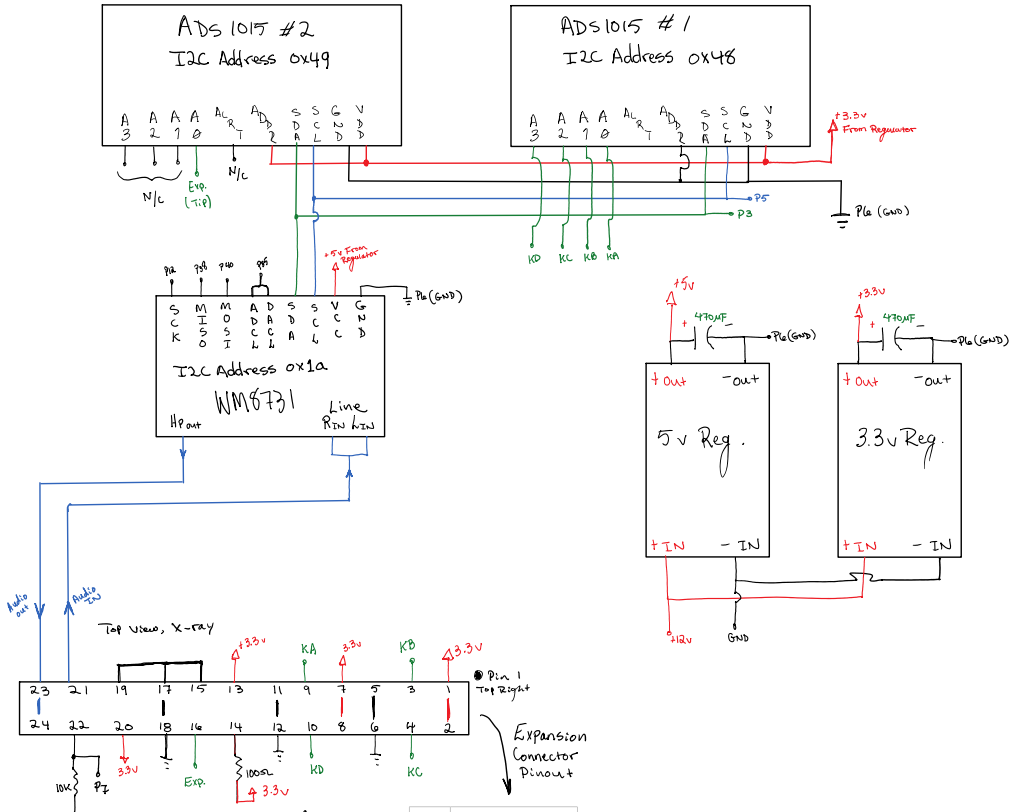

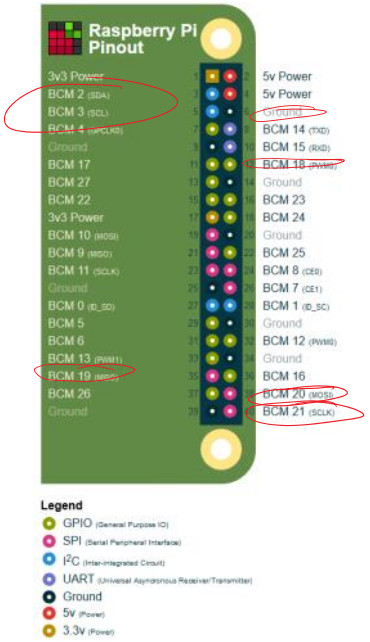

Pxx References Rpi Pin #

These drawings represent the same connector.

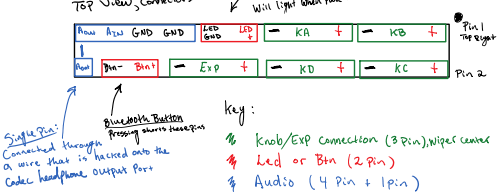

Key:

- Knob/Exp Connection (3 Pin), Wiper center
- Led or Btn (2 Pin)
- Audio (4 Pin + 1 Pin)

Pin #	Name
1	3.3v
2	3.3v
3	Knob B signal
4	Knob C signal
5	GND
6	GND
7	3.3v
8	3.3v
9	Knob A signal
10	Knob D signal
11	GND
12	GND
13	LED +
14	3.3v, through 100 Ohms
15	LED GND
16	EXP Pedal signal
17	AGND
18	GND
19	AGND
20	Bluetooth Btn +
21	Audio Input
22	Bluetooth Btn -
23	Audio Out to external Jack*
24	Audio Out from Codec*